MOBAPAD

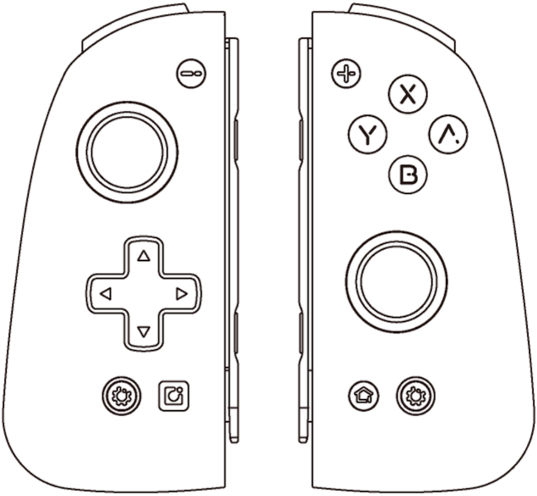

Mobapad S1 Liquid Silicone Controller

S1-HD/S1

LAYOUT

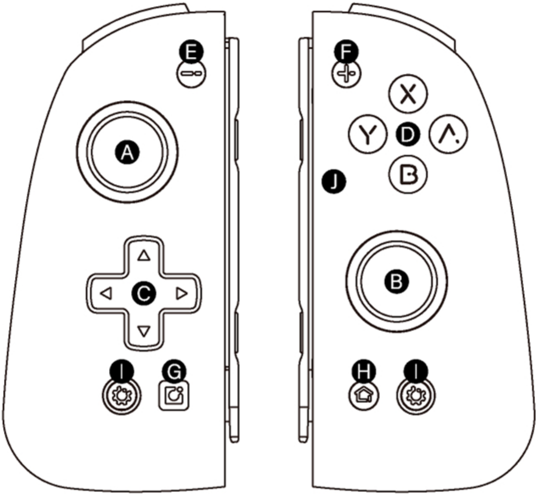

Ⓐ Left Joystick

Ⓑ Right Joystick

Ⓒ D-pad

Ⓓ Face Buttons

Ⓔ Minus

Ⓕ Plus

Ⓖ Screenshot

Ⓗ Home Button

Ⓘ Setting Button/Ring Light

Ⓙ NFC

LAYOUT

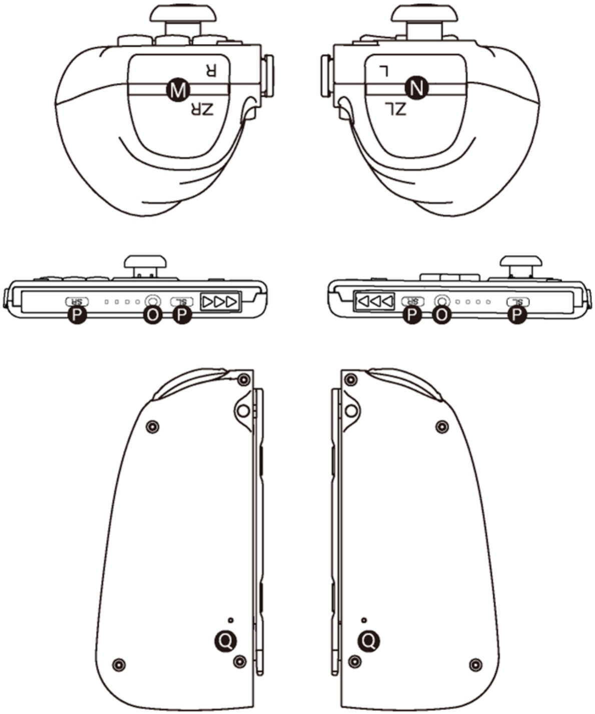

Ⓜ R/ZR

Ⓝ L/ZL

Ⓞ Paring Buttons

Ⓟ SR/SL

Ⓠ Reset Hole

CONNECT TO THE SWITCH

Wired Connection

Attach the S1 controller to Switch for connection.

Wireless Connection

① On the Switch, tap on 【🎮】 and select "Change Grip/ Order"

② Long press 【◎】, the channel lights flash like marquee, pairing starts.

③ When LED1 stays on, press 【⌂】 to return to home page.

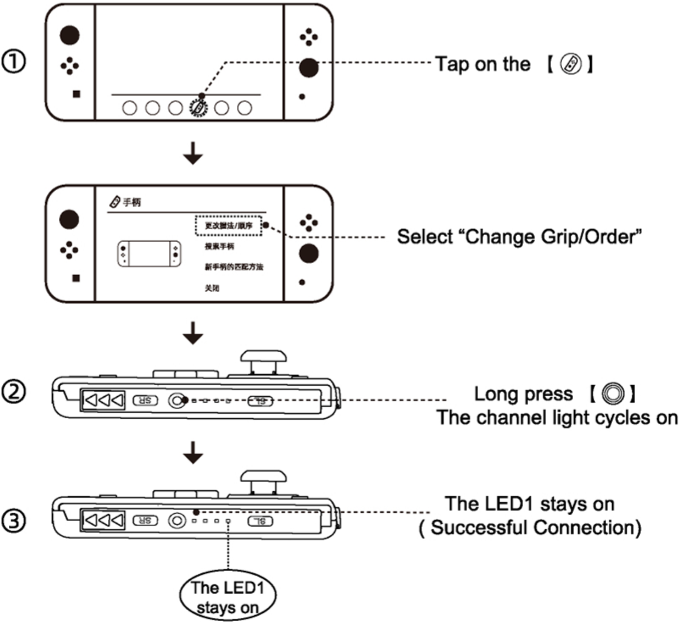

Tap on the 【🎮】

Select “Change Grip/Order”

Long press 【◎】
The channel light cycles on

The LED1 stays on
(Successful Connection)

The LED1 stays on

WAKE UP & RECONNECT

After automatic sleep or manual shutdown, short pressing the 【⌂】 will awaken the controller or reconnect to the previously paired device.

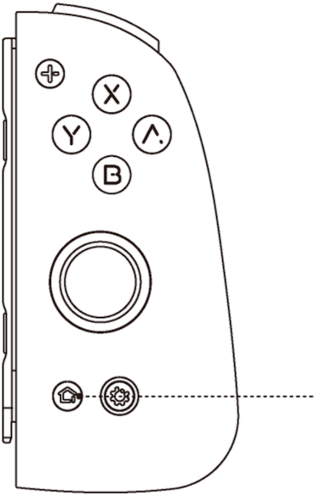

Short press【⌂】
to wake it up

ON/ OFF

- Long press 【⌂】 for 3 seconds to power off.
- When the controller is connected, it will automatically power off if idle for more than 15 minutes.
- When the controller is in an unconnected state (waiting for connection), it will automatically power off if not connected after 2 minutes.

TURBO FUNCTION

- **Turbo-Mappable Buttons:** A/B/X/Y/L/ZL/R/ZR

  D-pad: UP/ DOWN/ LEFT/ RIGHT
- **Manual Turbo:** The controller's ring light will start to flash as the button is pressed.
- **Auto Turbo:** The controller's ring light will continuously flash automatically.

Manual Turbo	⚙ +Function Button	After the first setup, hold down the function button to activate turbo, release to stop.
Auto Turbo	⚙ +Function Button	After the second setup, short press the function button to initiate automatic turbo,short press the function button again to pause the turbo.
Disable Single-Key Turbo	⚙ +Function Button	After the third setup, the turbo function of the certain button will be disabled.
Turbo Mode Switching	⚙ + 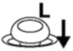 Downshift	Low Medium High
	⚙ + 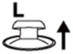 Upshift	
LED Indicators		When switching to the Low : ring light flashes once. When switching to the Mid: ring light fashes twice. When switching to the High : ring light fashes three times.
Note: The button settings for the turbo function do not save after the controller is powered off.		

NFC

- The controller features built-in NFC supports for Amiibo.
- **How to use:**

  After successfully connecting the controller to the Switch, if the game supports Amiibo functionality, you can use the figurine on the sensing area to activate in-game items.

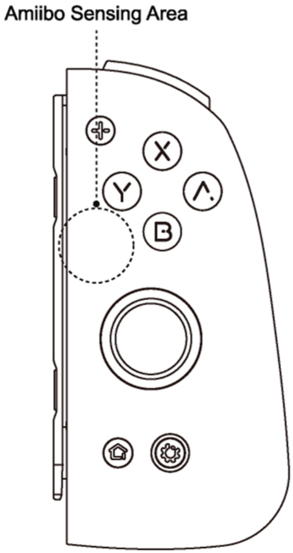

DOWNLOAD THE APP

Scan the QR code to download the mobapad APP.

AFTER-SALE SERVICE

Feel free to reach out to us if you encounter any concerns or issues with Mobapad controller. We are committed to addressing your needs and ensuring your satisfaction within a year.

Email: service@mobapad.com

Address: Building D, Youth Entrepreneurship Park, No. 18, Jianshe East Road,
Qinghua Community, Longhua Street, Longhua District, Shenzhen

MOBAPAD

Follow for More